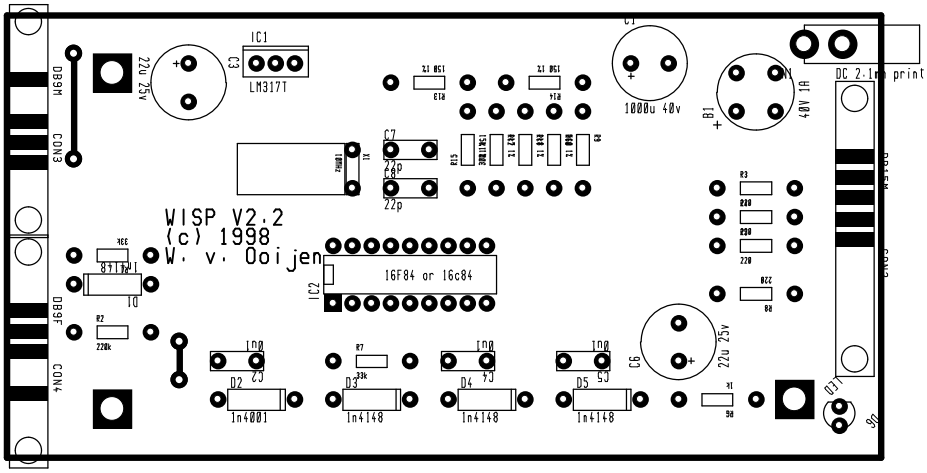

WISP V2.2
(c) 1998
W. v. Ooijen
IC1
LM317T
C3
22u 25v
DB9M
CON3
DB9F
CON4
C7
22p
C8
22p
IC2
16F84 or 16c84
C1
1000u 40v
B1
40V 1A
DC 2.1mm print
C6
22u 25v
D2
In4001
D3
In4148
D4
In4148
D5
In4148